2 SIDE COVER ASSY.L

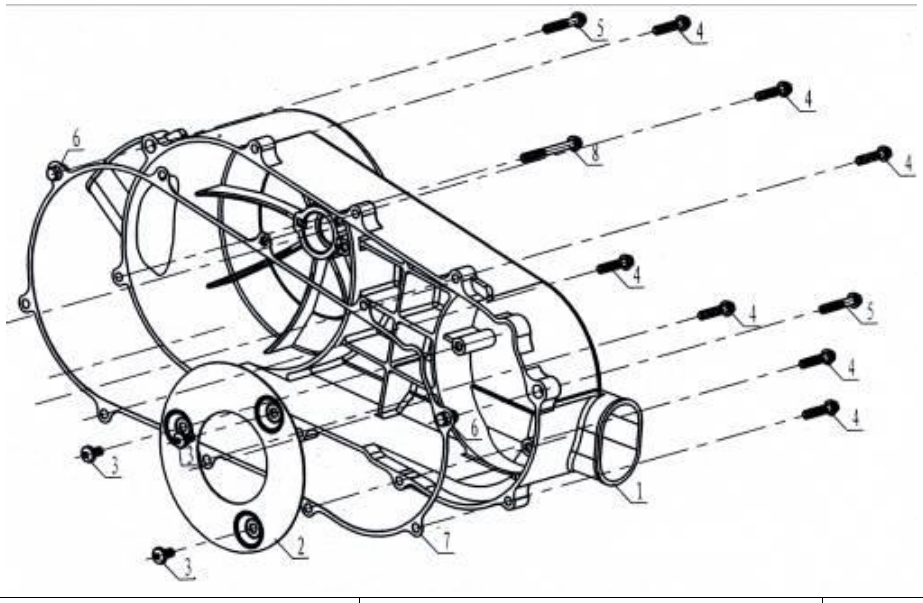

No.	P/N	ENGLISH	Q'ty
1	172MM-B-012001	LEFT SIDE COVER	1
2	172MM-B-012002	AIR DAMPER	1
3	818-M6X12	SCREW	3
4	172MM-B-012005	BOLT	7
5	152MI-013008	BOLT	2
6	152MI-021005	LOCATING PIN Ö10x14	2
7	172MM-B-012003	LEFT SIDE COVER SEAL WASHER	1
8	152MI-021018	BOLT	1