18 ELECTRIC STARTER ASSY

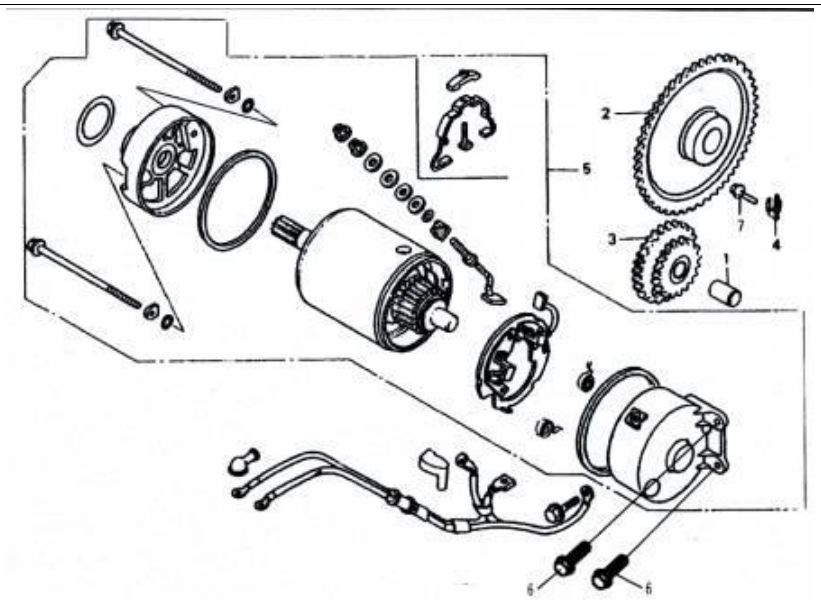

No.	P/N	ENGLISH	Q'ty
1	172MM-090001	DUPLICATE GEAR AXIS.	1
2	172MM-092000	DRIVEN GEAR COMP	1
3	172MM-091000	DUPLICATE GEAR COMP	1
4	172MM-090007	MOUNTING PLATE	1
5	172MM-093000	STARTER COMP	1
6	152MI-080013	BOLT M6X22	2
7	172MM-090008	BOLT M6X14	1