11 SPEED CHANGER.

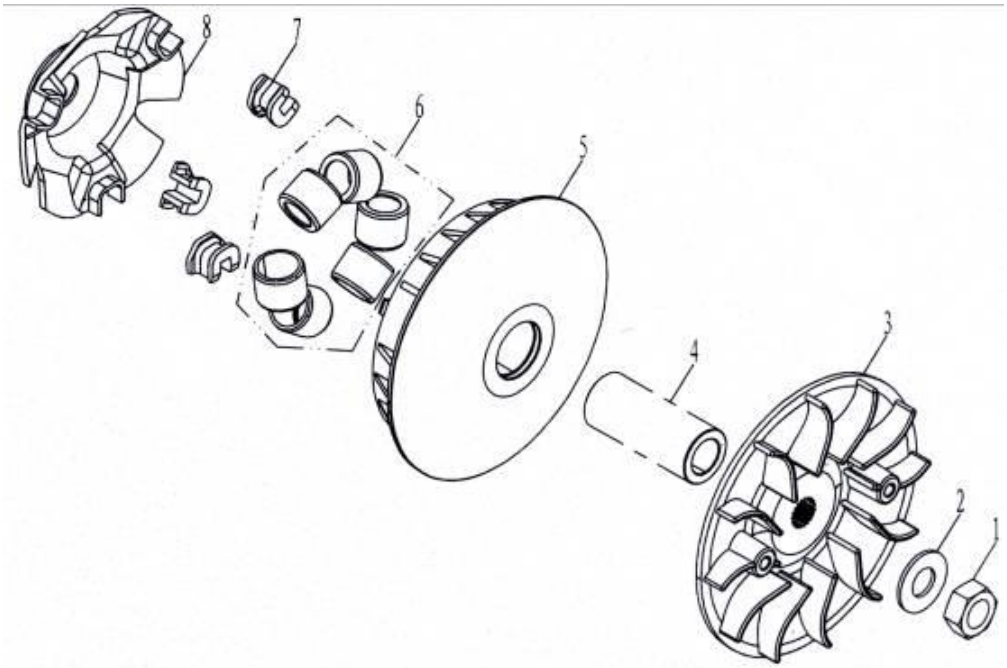

No.	P/N	ENGLISH	Q'ty
1	172MM-021007	NUT M14X1.5	1
2	172MM-021006	WASHER14.5X30.2	1
3	172MM-A-051005	DRIVE WHEEL PAN	1
4	172MM-A-051003	DRIVE WHEEL PAN SLEEVE	1
5	172MM-A-051100	MOVABLE DRIVE PAN	1
6	172MM-A-051200	OFFCENTER ROLLER	6
7	172MM-A-051004	SLIDING BLOCK	3
8	172MM-A-051002	PUSH PAN	1